MALE END VIEW	FEMALE END VIEW	WIRING DIAGRAM

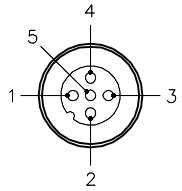

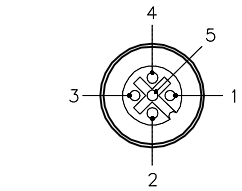

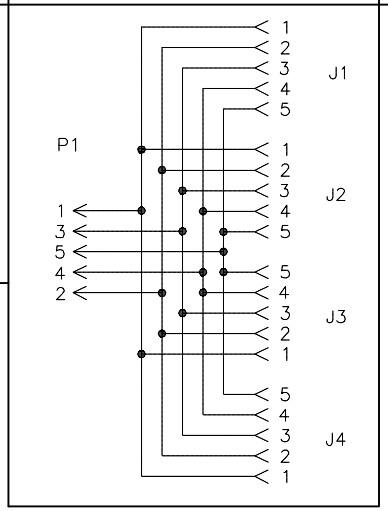

SPECIFICATIONS

CONTACT CARRIER MATERIAL	TPU OR NYLON
MOLDED HEAD MATERIAL/COLOR	TPU/YELLOW
CONTACT MATERIAL/PLATING	BRASS/GOLD
COUPLING NUT MATERIAL/PLATING	BRASS/NICKEL
RATED CURRENT [A]	2.0 A
RATED VOLTAGE [V]	250 V
OUTER JACKET MATERIAL/COLOR	PVC/GREY (P1), PVC/YELLOW (J1–J4)
CONDUCTOR INSULATION MATERIAL	PVC
NUMBER OF CONDUCTOR [AWG]	5x22 AWG (P1), 6x26 AWG (J1–J4)
TEMPERATURE RATING	−40°C to +80°C (−40°F to +176°F)
PROTECTION CLASS	MEETS NEMA 1,3,4,6P AND IEC IP68

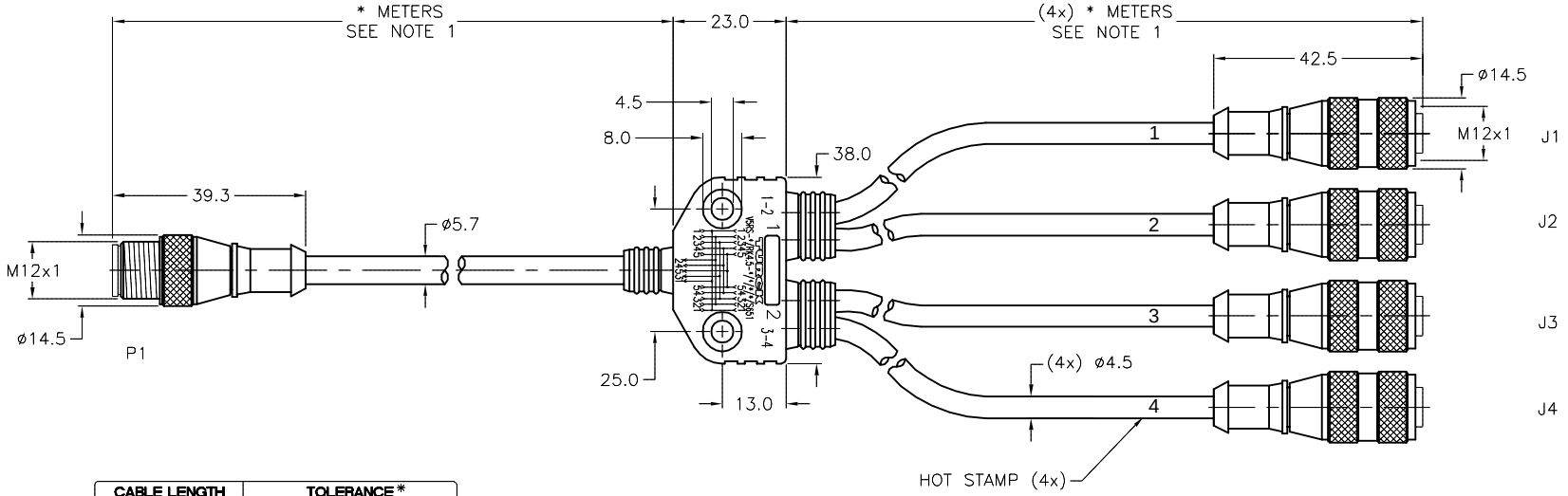

CABLE LENGTH	TOLERANCE *
ALL LENGTHS	+ 4% (OR 50mm) OF LENGTH − 0% (OR 0mm) OF LENGTH WHICHEVER IS GREATER
STRIP LENGTH	**TOLERANCE ***
0–7mm	±0.5mm
8–29mm	±1.0mm
30–49mm	±2.0mm
50–69mm	±3.0mm
70–100mm	±4.0mm
OVER 100mm	±5.0mm
*** UNLESS OTHERWISE SPECIFIED**	

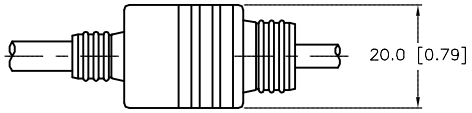

SOURCE DRAWING - FOR REFERENCE ONLY

NOTES:

1. "*" INDICATES CABLE LENGTH IN METERS. CONTACT TURCK TO ORDER SPECIFIC LENGTHS.

2. "/S651" DESIGNATES PARALLEL WIRING.

REV	DESCRIPTION	BY	DATE	ECO NO.
D	DRAWING PROCESSED AS PART OF ECO 33971	CBM	04/06/11	33971

RELATED DOCUMENTS
1.
2.
3.
4.

3RD ANGLE PROJECTION

THIS DRAWING IS CONFIDENTIAL AND THE PROPERTY OF TURCK INC. USE OF THIS DOCUMENT WITHOUT WRITTEN PERMISSION IS PROHIBITED.

TURCK
3000 CAMPUS DRIVE
MINNEAPOLIS, MN 55441
1-800-544-7769
(763) 553-7300
(763) 553-0708 fax
www.turck.us

MATERIAL
SEE SPECIFICATIONS

FINISH
SEE SPECIFICATIONS

ALL DIMENSIONS DISPLAYED ON THIS DRAWING ARE FOR REFERENCE ONLY

CONTACT TURCK FOR MORE INFORMATION

DRFT JBJ
DATE 02/13/02
APVD
SCALE 1=1.5

UNIT OF MEASUREMENT
MILLIMETERS

DO NOT SCALE THIS DRAWING

DESCRIPTION
V5RS-*/RK 4.5-*/*/*/*/S651

IDENTIFICATION NO.

REV
D

FILE: 777001193

SHEET 1 OF 1